FARMERS HOME FURNITURE 7' HIGH X 17' WIDE STORE FRONT SIGN

Farmers Home Furniture store front sign specifications

UL listed / LED lighted / channel letters:
LED lighting - Agilight Pro 115 white (double rows in vertical strokes of Home)
Plastic faces - 3/16" acrylic: Farmers Furniture - white / Home - 2016 yellow
Trim-cap - Farmers Furniture - 3/4" white / Home - 1" Gemni 2540 Mango yellow
Returns - .040 white inside: Farmers Furniture - 3.5" white / Home - 4.5" yellow to match 2016 yellow acrylic
Backs - white 1/8 poly-metal
Power supply - Agilight Slim 60w / 12v - mounted inside "h" of Home
AC Disconnect switch - left side of "h" of Home
Photo Cell - Left side of "h" of home
UL polycarbonate cover - covers all AC power components inside "m" of home to meet UL requirements

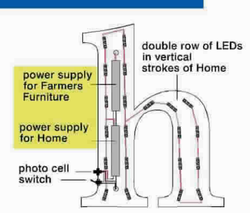

UL note - there must be a layer of clear polycarbonate under the acrylic lid of this letter to meet UL regulations because of the presence of 120v AC power

Powder Coated aluminum back-panel:
Face - .125 (5052 alloy) welded joints
Sides - 3" deep: same materials as face
Powder coating - Sherwin Williams rough texture
polyester Super Durable
SW 6962 Dazzle (10 min. / 400 F)
Structural - 2" x 1.4" and 1 1/2" x 1/4" aluminum angle
Mounting - 1/2" steel nuts embedded into frame to accept
1/2" threaded rod for through mounting to store front

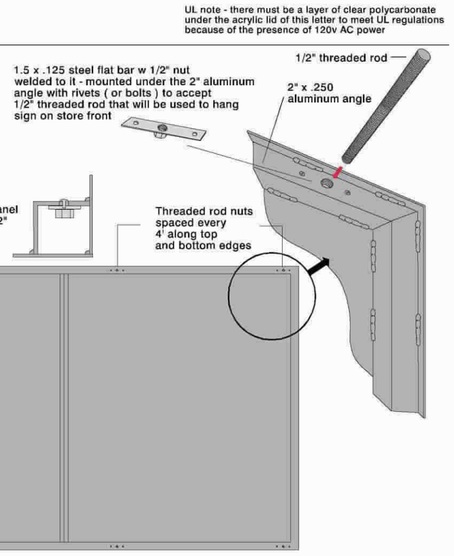

Back structural and mounting hardware details

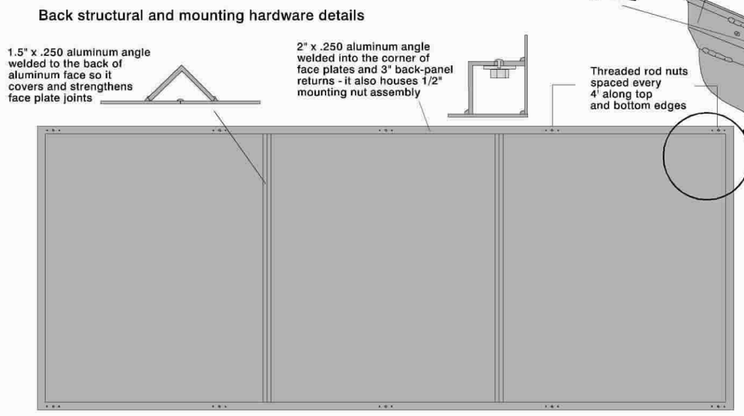

FRANKLIN, KENTUCKY

813 S. Main Street 42134